Annual Meeting
March 11-13, 2012
Manchester Grand Hyatt
San Diego, CA

AM-12-73

LC-MAX and Other LC-FINING Process Enhancements to Extend Conversion and On-stream Factor

Presented By:

Mario Baldassari
Chevron Lummus Global
Bloomfield, NJ

Ujjal Mukherjee
Chevron Lummus Global
Bloomfield, NJ

LC-MAX and Other LC-FINING Process Enhancements To Extend Conversion and On-stream Factor

Mario Baldassari and Ujjal Mukherjee, Chevron Lummus Global
Steve (Suk-Jin) Jung, GS Caltex Corporation

Abstract

Recent process enhancements incorporated into our LC-FINING unit designs and operating experience gained from recently commissioned units have led to a new generation of plants with reduced investment, improved energy efficiency, enhanced conversion capabilities and improved unit on-stream factors. An example of such a unit is GS Caltex's 60 kBPSD Vacuum Residue Hydrocracker, which was commissioned the 3rd quarter of 2010 just 42 months after the kick-off of the Basic Engineering Design. This unit was able to achieve design throughput and conversion within 40 days of introducing vacuum residue feed and has been able to realize an on-stream factor of 94 percent over its first 18 months of operation, exceeding industry norms by 4 percent.

In addition to the extended conversion capabilities of our LC-FINING process, Chevron Lummus Global has proceeded to develop the LC-MAX process to further alleviate conversion constraints. LC-MAX combines LC-FINING and solvent deasphalting in an integrated hydroprocessing configuration, enabling residue conversions of 85 volume percent to be attained, even when processing very difficult high sediment forming opportunity crudes.

Introduction

Chevron Lummus Global's (CLG's) LC-FINING process is the preeminent vacuum residue hydrocracking process (VR HCR) in the world with over 460 kBPSD of licensed capacity, 240 kBPSD of which has been placed in operation in the last 9 years. In addition, LC-FINING units have been able to achieve the highest residue conversion levels in the industry, with commercial unit conversions ranging from 60 to 80 percent depending on the feedstock quality and the specific unit's processing objectives. GS Caltex's (GSC) 60 kBPSD VR HCR Unit was the most recent unit to be commissioned. This unit started-up in September of 2010, just 42 months after the kick-off of the Basic Engineering Design (BED), besting industry norms by 9 to 18 months.

New enhancements incorporated into the design and operating experience gained from recently commissioned plants have led to a new generation of plants with reduced investment, improved energy efficiency and enhanced reliability. Over the last decade CLG has made a concerted effort to improve the reliability of the LC-FINING process, with the result being that most units are operating with an on-stream factor in excess of 95 percent. GS Caltex's VR HCR has been able to attain an on-stream factor of 94 percent over its first 18 months of operation, exceeding industry norms by 3 to 4 percent.

LC-FINING Process Features

The LC-FINING process hydrocracks heavy vacuum residue feeds to lighter distillates while simultaneously removing sulfur, nitrogen, micro-carbon residue (MCRT), and metals containing species. Table 1 summarizes the range of vacuum residue feed properties that have been commercially processed. The core feature of the LC-FINING process is the ebullated bed reactor. A schematic of this reactor is provided in Figure 1. The catalyst in an ebullated bed reactor is expanded approximately 40 percent above its settled bed level by recirculating oil collected at the top of the reactor via a reactor ebullating pump. The recirculated oil is separated from the reactor effluent vapor by means of a recycle disengagement pan. The oil then flows through a downcomer pipe to the ebullating

pump which discharges it into the bottom plenum of the reactor, where it mixes with the incoming reactor feed oil and hydrogen. The mixture then flows up through the primary distribution grid expanding the catalyst bed. Due to the high degree of back mixing that exists, the reactor essentially operates at isothermal conditions with only a slight axial temperature gradient. In addition, by expanding the catalyst bed, catalyst can be added and withdrawn on-stream allowing the unit to operate for extended periods between turnarounds. The rate of catalyst addition can be adjusted to maintain desired product quality objectives in response to changes in feedstock characteristics. Finally, the ebullated bed allows heavy, high metals, high CCR and asphaltene containing feeds, as well as feeds containing high levels of finely dispersed solids, to be processed without risk of pressure drop build-up. As a result, LC-FINING units routinely operate for 3 to 4 years between unit turnarounds.

Table 1

Commercial Unit VR Properties

Property	Value
API Gravity	3.2 - 8.5
Sulfur, wt%	2.3 - 6.0
Nitrogen, wppm	3000 - 6000
CCR, wt%	16 - 28
nC7 asphaltenes, wt%	5.0 - 18.0
Ni + V, wppm	160 - 500

Figure 1
LC-FINING Reactor Schematic

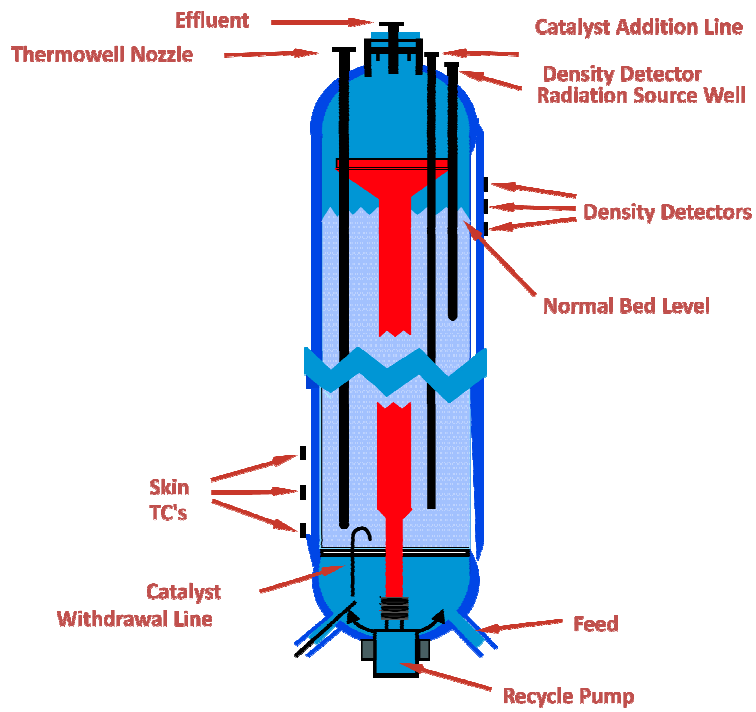

Process Enhancements

The latest generation of LC-FINING units has included a number of design enhancements to reduce investment and operating costs, improve the overall unit energy efficiency, and enhance the stability of the unconverted oil product, allowing conversion limits to be extended while concurrently reducing fouling in equipment downstream of the reactors. These enhancements, which are discussed in more detail below include:

- Addition of an Inter-Reactor Separator
- Addition of membrane technology for purification of the recycle gas
- Addition of integrated hydroprocessing
- Features to enhance unconverted oil stability and extend conversion limits
- Development of the LC-MAX high conversion process

Inter-Reactor Separator

The addition of a separator between LC-FINING reactors enables reaction train capacities to be increased 60 to 65 percent for those designs that are gas velocity limited. This is accomplished by separating the

vapor and liquid product exiting the upstream reactor and injecting fresh high purity hydrogen treat gas into the downstream reactor. In this way treat gas is no longer cascaded from the upstream to the downstream reactor. Rather the treat gas rate to the downstream reactor is independently set to satisfy the hydrogen partial pressure requirements in this reactor consistent with the chemical hydrogen that is being consumed. Whereas the train capacities of some of the earlier generation LC-FINING units were typically limited to 25 to 30 kBPSD, the addition of the Inter-Reactor Separator, in combination with other process enhancements, has enabled train capacities to be increased to 60 to 65 kBPSD for units operating at conversions of 75+ percent and up to 100 kBPSD for lower conversion units or those operating on a diluted feed. The Inter-Reactor Separator was first commercialized in 2003 and has been incorporated into all of our LC-FINING units since.

Membrane Purification

The use of membrane technology for the removal of light ends from the recycle gas has proven to be a low cost, highly reliable and energy efficient method for purifying the recycle gas. The resulting high recycle gas hydrogen purity with membranes enables treat gas rates to be reduced by 30 percent while still satisfying the hydrogen partial pressure objectives. This not only reduces investment for treat gas preheat and reactor effluent gas cooling, purification and recompression equipment, but it also enables reaction train capacities to be increased. Hydrogen losses and recycle gas compression requirements are also lower with membranes compared with other purification systems. The application of membranes was first commercialized in 2007 and subsequently two other licensed units have incorporated membranes in their designs with good success.

Integrated Hydroprocessing

In 2003 the first commercial LC-FINING unit to utilize a close-coupled, fixed bed, integrated hydrotreating (IHT) reactor, within the same reaction loop as the LC-FINING reactors, was commissioned. Figure 2 is a simplified schematic of this process. The basic process concept utilizes the excess hydrogen and heat contained in the LC-FINING reactor effluent vapor to hydroprocess the LC-FINING distillate products, either alone or in combination with external feeds in a single reaction loop, thereby eliminating the need for independent gas cooling, product separation, recycle gas purification and make-up and recycle gas compression equipment. As a result, high pressure equipment service count is reduced from 14 for a standalone hydrotreater to just 6 for the Integrated HDT, leading to a 35 to 40 percent reduction in the associated hydrotreater investments.

In addition, close coupling the IHT with the LC-FINING reactors provides for improved heat integration and energy efficiency compared with a standalone hydrotreater since it is not necessary to condense, fractionate and then reheat the distillate hydrocarbon fractions present in the LC-FINING reactor effluent vapor. This also substantially simplifies the LC-FINING atmospheric fractionation system design, eliminating the need for a separate distillate feed heater. Depending on the LC-FINING reaction severity, and resulting excess hydrogen contained in the LC-FINING reactor effluent, the capacity of the IHT can range between 1 to 1.5 times the LC-FINING unit's capacity.

Building on the success of this first commercial application, CLG incorporated integrated hydroprocessing systems into two other commercial LC-FINING units. One of these refiners integrated a two-stage hydrocracker (CLG ISOCRACKING process) into their LC-FINING unit. This unit processes LC-FINING atmospheric and vacuum distillates along with SRVGO, converting 75 percent of the VGO fraction while producing Euro IV diesel.

Figure 2
LC-FINING with Integrated HDT Schematic

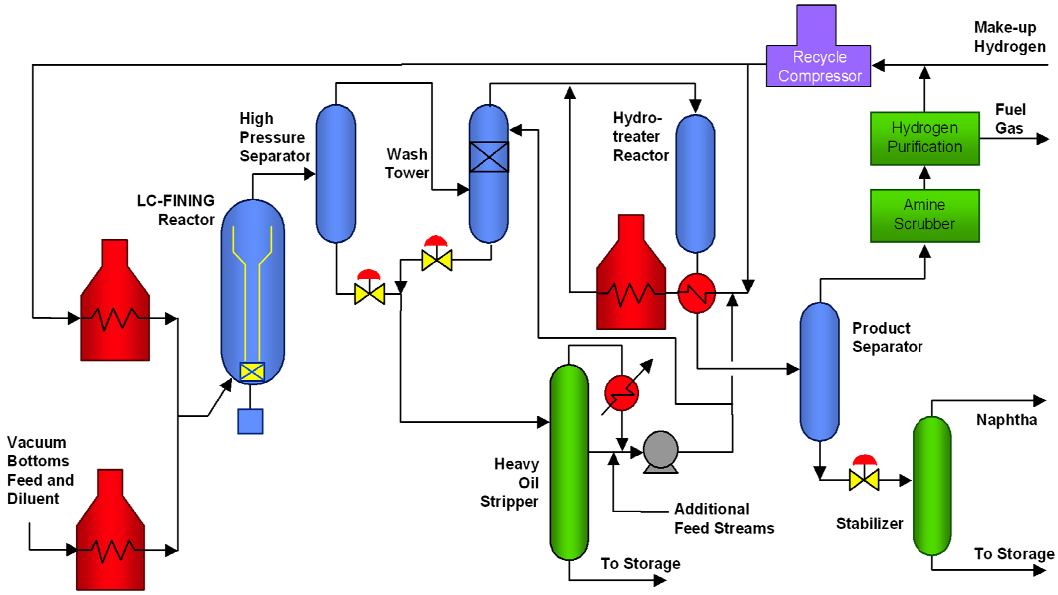

Features to Enhance Product Stability and Extend Conversion Limits

Residue conversion in VR HCR units is typically limited by the unconverted oil stability. In some cases, such as when the unconverted residue is used to produce bunker fuel oil, the product must satisfy specific stability criteria. In these instances the sediment content of the fluxed bunker fuel oil, as measured by the Shell Hot Filtration Test (IP-375) must be less than 0.15 weight percent. In other instances, such as when the unconverted residue is fed to either a coker or gasification unit the conversion is typically limited by the propensity of the unconverted oil to form coke and foul the downstream fractionation equipment. In either case the stability of the unconverted oil is the limiting factor. The stability/compatibility of the unconverted oil is a function of the molecular composition of the unconverted asphaltenes in the broader context of the composition of the non-asphaltene fractions in the unconverted oil namely; the saturates, aromatics and resins.

CLG has incorporated a number of features into our recent LC-FINING unit designs to enhance the stability of the unconverted oil while minimizing fouling in the downstream atmospheric and vacuum fractionation systems. These features address the following basic concepts;

- Optimum utilization of reactor diluent
- Optimization of inter-reactor quench mediums
- Minimization of post reactor cracking and polymerization reactions
- Optimal injection of diluents and cutterstocks in fractionation systems

The application of these concepts in a recently commissioned LC-FINING unit has resulted in significantly lower fractionation system fouling. This unit has not had to decoke the vacuum tower feed furnace nor clean any exchangers in their vacuum tower bottoms (VTB) rundown circuit over the first 18 months of

operation. By comparison many VR HCR units typically find it necessary to clean exchangers in their VTB circuit either weekly or biweekly and decoke their vacuum tower furnaces every 12 to 18 months.

LC-MAX

Description

CLG developed the LC-MAX process to alleviate conversion constraints resulting from feedstock quality and/or fractionator fouling limitations. This process combines LC-FINING and solvent deasphalting (SDA) in an integrated hydroprocessing configuration. With LC-MAX residue conversions ranging from a minimum of 80 up to 90 percent can be attained, even when processing very difficult high sediment forming feeds such as Russian Export crude (Urals) or South American and Canadian heavy crudes like Hamaca or Cold Lake .

Figure 3 is a schematic of the LC-MAX process. The basic process configuration consists of two hydrocracking stages, the first processing neat vacuum residue at low to moderate conversions and the second processing SDA DAO at high conversion. The first stage conversion is generally set between 48 to 60 percent, depending on the feedstock quality, and can typically be accomplished in a single reactor. The effluent from this first reaction stage is then fractionated into various distillate fractions plus an unconverted residue, which is then processed in a SDA unit designed to achieve a DAO lift of 70 to 75 percent. The recovered DAO is then hydrocracked in a dedicated second reaction stage at conversions of 75 to 85 percent. The reactor vapor effluents from the first and second reaction stages are comingled and processed in a common reactor effluent cooling, purification and compression system. The conversion products from the second hydrocracking stage are also blended with those from the first and distilled in a common fractionation system. The pitch from the SDA unit can be pelletized, burned after viscosity reduction to generate power, or processed in a coker or a gasification unit to produce hydrogen or generate power. The block flow diagram in Figure 4 shows the battery limit stream balance for a 40 kBPSD LC-MAX unit processing a typical Middle Eastern vacuum residue at an overall conversion of 85 volume percent.

Figure 3: LC-MAX Process Schematic

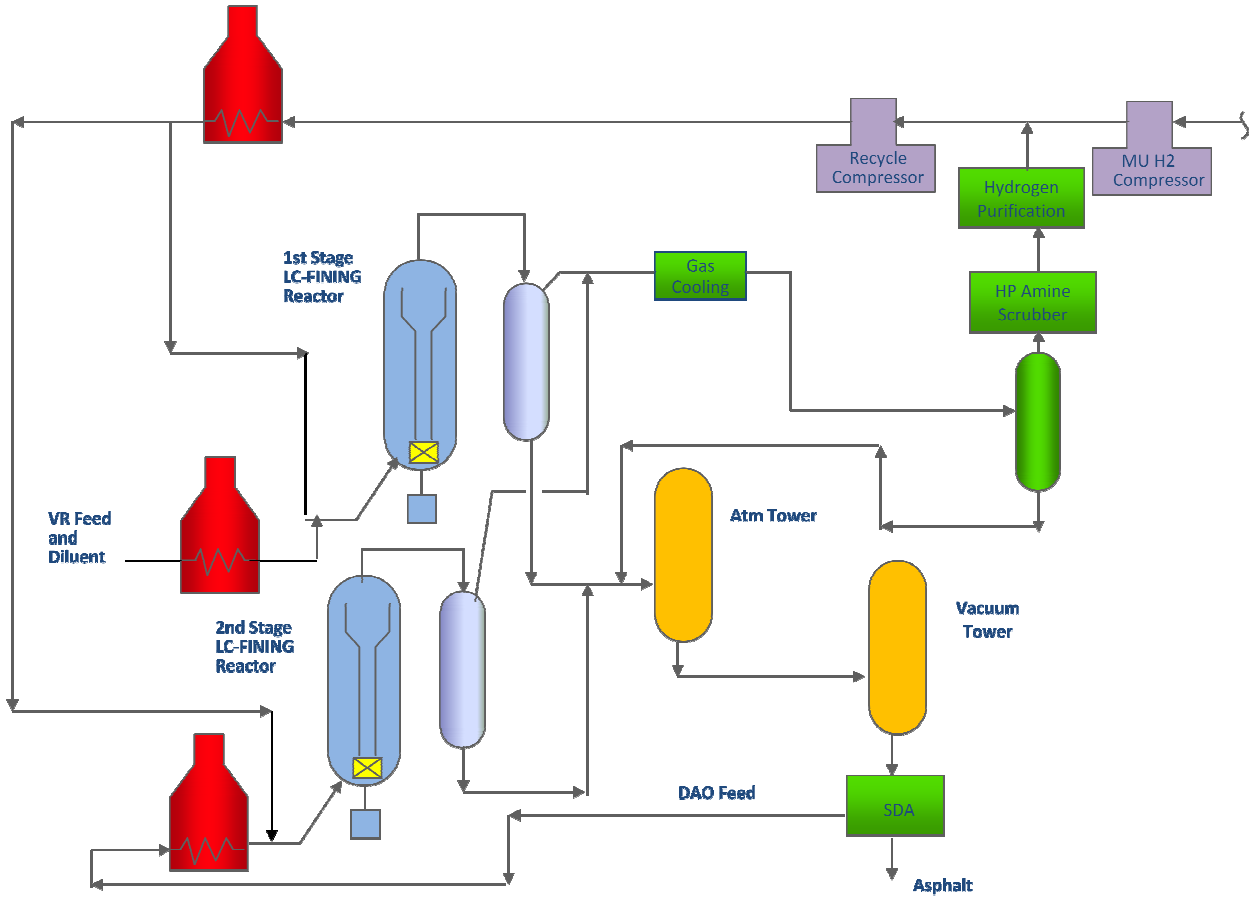

Figure 4: LC-MAX Block Flow Diagram

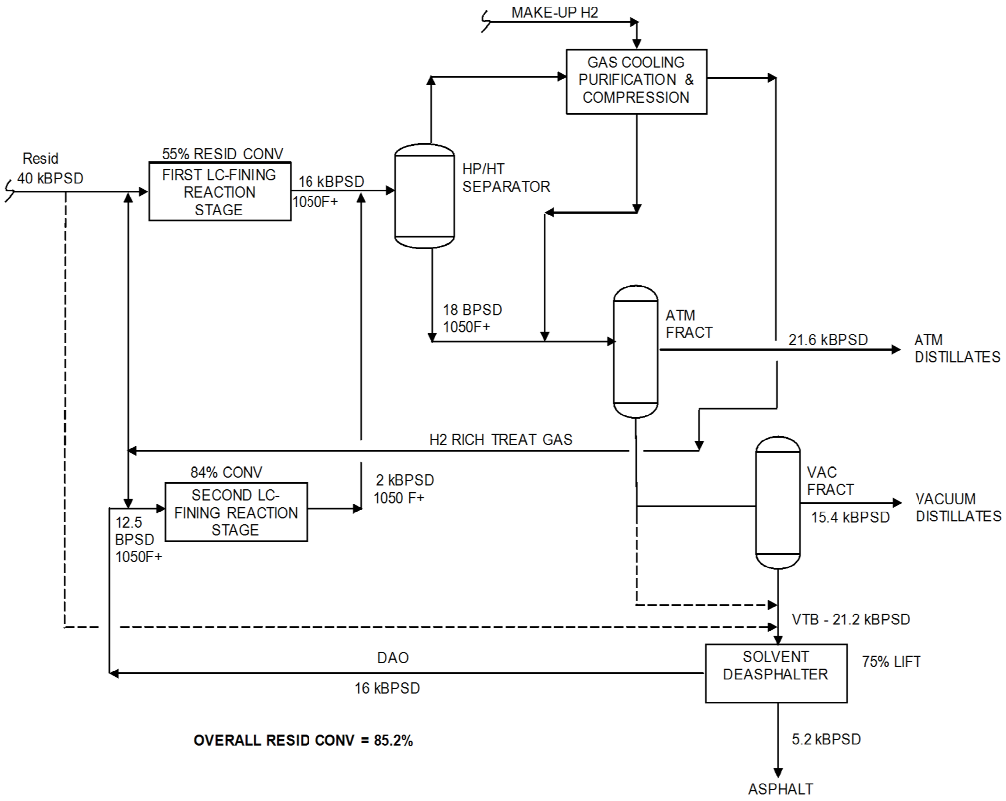

Process Concept

By maintaining the conversion of the first hydrocracking stage relatively low, coke precursor and sediment formation in the heavy unconverted oil product from this stage is dramatically reduced. As a result, the first reaction stage can be operated at relatively high temperatures and high space velocity while still producing a heavy unconverted oil product with superior stability. At these low conversion levels the sediment content of the first stage unconverted oil is expected to be < 0.05 weight percent even when processing the most difficult opportunity crudes. Since the first stage unconverted asphaltenes are rejected in the SDA pitch and the DAO contains negligible levels of asphaltenes, the second hydrocracking stage can be operated at very high temperature and conversion severity without appreciable sediment formation. Pilot plant testing has shown sediment levels to be < 200 wppm even at conversions in excess of 85 weight percent.

Economic Considerations

The combination of LC-FINING with SDA not only extends the conversion limits and increases crude processing flexibility it also reduces reaction system investment and operating costs compared with a standalone LC-FINING unit, that feeds a delayed coker or is designed to produce bunker fuel oil from the unconverted residue. The enhanced stability of the first and second stage unconverted oil products allows both reaction stages to be operated at higher thermal severity, thereby requiring less reactor volume than is typically required in conventional LC-FINING units operating at 15 to 25 percent lower conversion. In

addition, since a substantial proportion of the feed metals are rejected in the SDA pitch the LC-MAX process consumes 10 to 15 percent less catalyst. Also, hydrogen consumption associated with the saturation and conversion of the heavy asphaltene molecules is substantially reduced resulting in more efficient hydrogen utilization.

Table 2 provides a comparison of critical economic factors versus conventional LC-FINING.

Table 2

Comparison of Economic Factors

	LC-FINING	LC-MAX	
		1st Stage	2nd Stage
Capacity, kBPSD	40	40	17
Conversion Ratio	Base	0.78 Base	1.2 Base
Reactor Volume Ratio	Base	0.45 Base	0.35 Base
Catalyst Addition Rate	Base	0.75 Base	0.13 Base
Chemical H2 Cons. Ratio	Base	0.7 Base	0.4 Base

Summary

The LC-MAX process provides an efficient cost effective solution for achieving high residue conversions. By rejecting asphaltenes in the SDA pitch residue conversions of 85 volume percent can be attained even when processing very difficult high sediment forming opportunity crudes. With LC-MAX high conversion levels can be attained with reduced reactor volume, catalyst addition rate and hydrogen consumption than required by slurry hydrocracking processes. The LC-MAX process concept has been thoroughly vetted through extensive pilot plant testing and is ready for commercialization.

GS Caltex's VR HCR

GS Caltex's (GSC) 60,000 BPSD Vacuum Residue Hydrocracker (VR HCR) is the most recent LC-FINING unit to be commissioned. The major driving force for this project was to reduce the refinery bunker fuel oil production and increase diesel yield, without producing coke that has little or no value. This unit started up in September of 2010 just 42 months after kick-off of the basic engineering design (BED), besting industry norms by 9 to 18 months. The impeccable planning, engineering design, and project and construction management and execution, which led to the successful start-up of this unit in record time, was executed by GS Engineering and Construction (GSE&C). In addition to the fast track project execution schedule and successful unit start-up, GSC's VR HCR has also been able to achieve an on-stream factor of 94% over its first 18 months of operation, exceeding industry norms by 3 to 4 percent.

VR HCR Configuration

GSC's VR HCR consists of two parallel reaction trains with common fractionation, LPG recovery and catalyst handling systems. Each reaction train includes; its own feed charge pumps, independent hydrogen and feed oil furnaces, two reactors, heavy liquid product separation, gas cooling and distillate product separation, gas purification and make-up hydrogen and recycle gas compression equipment. A simplified schematic of GSC's VR HCR is shown in Figure 5.

GSC's VR HCR design incorporates a number of the process enhancements discussed in the preceding sections. In particular, the design includes; an Inter-reactor Separator, a membrane purification system, facilities to preferentially inject slurry oil between reactors, and design features that both enhance the stability of the unconverted oil product and minimize fouling in the downstream atmospheric and vacuum fractionation systems.

Figure 5: GSC's VR HCR Schematic

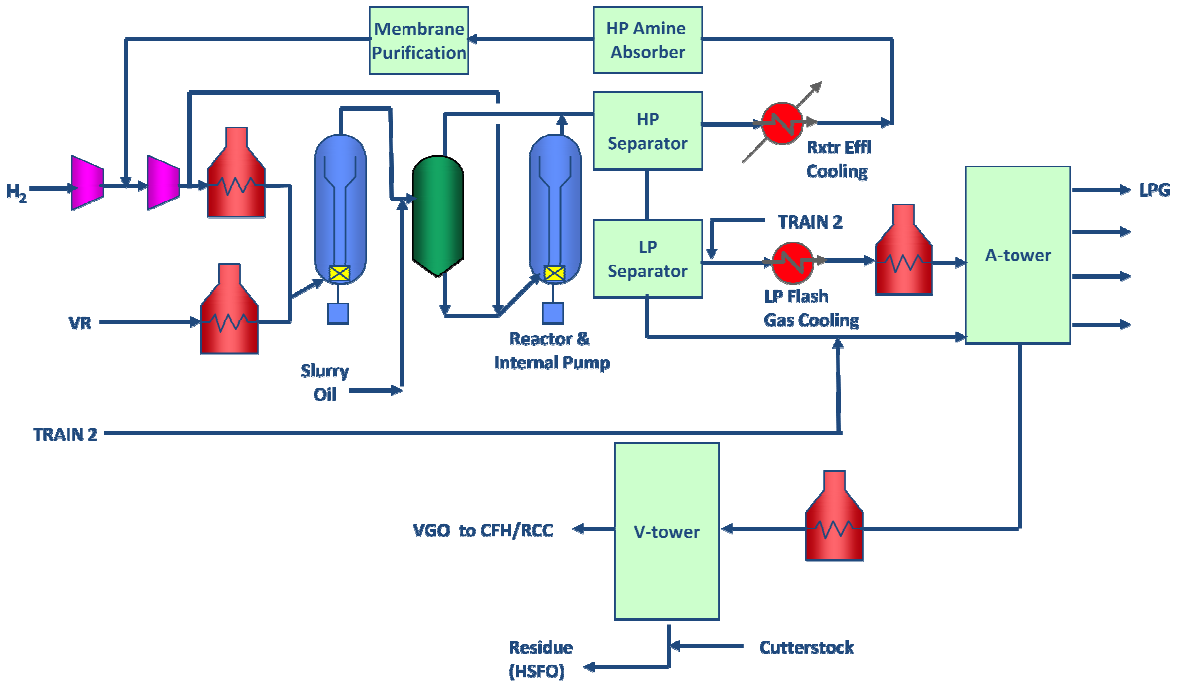

Factors Contributing to Successful Project Execution

A number of factors contributed to the successful fast track execution, commissioning and start-up of this project within 42 months of initiating the BED. These included:

- Involvement of project and refinery operations team during BED
- Seamless transition from BED to Detailed Engineering Design (DED)
- Early placement of critical equipment purchase orders
- Extensive use of modular construction
- Early organization of operation teams
- Extensive use of operation teams to track construction
- Early commissioning of utility systems and HMP (Hydrogen Unit)
- Extensive cutback system testing and DCS tuning during plant commissioning

In particular, GSC involved refinery operations personnel and GSE&C's detailed engineering designers in all key review meetings during the BED, leading to a seamless transition between the BED and DED phases. In February of 2008, just four months after CLG completed the BED, the DED activities ramped up to full speed. To expedite the project schedule GSC placed reactor purchase orders in November of 2007, even prior to initiating the DED. All

remaining critical equipment orders were placed by June of 2008. By October 2008 site work had already started and by December 2008 field construction actively began. The four LC-FINING reactors were delivered to the site in November of 2009, approximately 24 months after the reactor order was placed. The reactors were erected the following month just seven months prior to the mechanical completion of the unit. Extensive use of modular construction was employed to reduce the field construction man hours and construction schedule. These included modules for the main pipe rack and exchanger structures as well as for other structures' equipment and systems.

GSC attributed much of their ability to successfully commission and start-up their VR HCR to the early formation of operation teams and intensive operator training programs. Operation teams were assembled starting in the first quarter of 2009 and followed the project through the construction, commissioning, and start-up phases into the normal operation phase. The operations teams were responsible for; developing detailed unit commissioning and operating procedures, witnessing hydrostatic system tests, and preparing piping and instrumentation punch lists. Operator training began in December of 2009, seven months prior to the mechanical completion of the unit. This involved intensive classroom and field training programs, including extensive process simulator training. In all, GSC expended considerably more time and effort on operator training for the VR HCR than they had previously spent on other refinery training efforts. This resulted in the development of a highly skilled and knowledgeable operations team that flawlessly handled the commissioning and start-up of the unit without incident.

To assure that there were no impediments to the timely start-up of the VR HCR unit, GSC successfully commissioned the HMP and utility systems six to eight weeks prior to introducing vacuum residue feed. Subsequent to their commissioning, GSC has not experienced any problems with these systems during the first eighteen months of operation. Part of the successful commissioning of the VR HCR also included extensive testing and check-out of the DCS controls, advanced controls, and automatic cutback systems. As a result GSC was able to successfully tune the major DCS control systems prior to introducing VR feed.

GSE&C's superior project and construction execution capabilities and quality construction workmanship, in combination with GSC's highly skilled operations team, enabled the first VR HCR (LC-FINING) reaction train to be successfully placed in operation on September 3, 2010. The start-up of the second reaction train followed shortly thereafter on September 10th. Within just 40 days, the unit achieved design throughput and residue conversion on 100 percent vacuum residue feed.

Unit Operation and Performance

Design Basis

GSC's VR HCR was originally designed to process 60 kBPSD of total feed, including 57 kBPSD of deep cut vacuum residue derived from a 50/50 Arabian Heavy/Light crude blend at a residue conversion of 70 weight percent, while producing stable bunker fuel from the unconverted residue. By comparison, the unit has actually been able to achieve residue conversions ranging from 70 to 74 weight percent on a heavier feed, containing higher levels of sulfur, asphaltenes and metals than the design basis feed. The crude blend has been primarily composed of a mixture of Middle Eastern crudes, although at times small percentages of higher sediment forming feeds have also been processed. Table 3 provides a comparison of the design basis feed and key performance parameters versus actual operation.

Performance Summary

Vacuum residue feed was initially introduced to both reaction trains in early September of 2010 and the unit was quickly able to achieve design throughput and conversion within the first 40 days of operation. A performance test run was subsequently conducted in early April 2011, well after the catalyst inventory attained equilibrium activity. During the performance test, residue conversions averaged 70 weight percent, HDS removals averaged 80 weight percent, asphaltene removals averaged 72 weight percent and vanadium and nickel removals averaged 90 weight percent. The resulting unconverted oil from this operation possessed superior stability, producing a bunker fuel oil with a sediment content substantially below the specification limits. In addition, to the above performance parameters, the distillate selectivity towards kerosene and diesel exceeded our design estimates by 2 volume percent. Further, the unit performance over an extended nine month operating period matched the results of the performance test, remaining remarkably steady and consistent, considering the crude blend and resulting vacuum residue feed properties changed every 3 to 4 days. Overall GSC's VR HCR unit satisfied all of its performance guarantees including those for: unit throughput, residue conversion, chemical hydrogen consumption, catalyst addition rate, sulfur, nitrogen, MCRT and metals removals and various distillate yield and product properties.

Table 3

Design Basis Feed and Performance Parameters vs. Actual Operation

Parameter	**Design Basis**	**Actual Operation** (Performance Test)
Feedstock Source	50% AH +50% AL	Middle Eastern Blend
VR Feed Properties		
API Gravity	3.7	3.3
Sulfur, wt%	5.11	5.7
Nitrogen, wppm	4109	3668
CCR, wt%	27.0	25.8
Ni + V, wppm	206	248
Feed Rate, BPSD	60.0	60.2
Resid Conversion, wt%	70.0	70.0
HDS, wt%	80.0	80.0
HI (nC7) Removal, wt%	64.0	72.0
HDM, wt%	83.6	90.0
Flashed Unconverted Oil SHFT, wt%	---	0.06

Fractionation System Operation

Many VR HCR units need to frequently clean the exchangers in their VTB rundown circuit and schedule outages between major turnarounds to decoke their vacuum tower feed furnaces and clean out coke deposits from their atmospheric and vacuum tower stripping trays and column sumps. In contrast, after 18 months of operation, GSC's VR HCR unit has not experienced any fouling in its downstream fractionation systems. GSC has not found it necessary to either decoke their vacuum tower feed furnace or clean any of the exchangers in their VTB rundown circuit. A major reason for the reduced fractionator fouling at GSC can be attributed to enhancements CLG incorporated into this LC-FINING unit design.

On-stream Factor

As a result of GSE&C's superior construction quality assurance and GSC's highly skilled operators and on-line monitoring and maintenance procedures, the VR HCR unit has been able to achieve a 94 percent on-stream factor over its first 18 months of operation, exceeding industry norms by 3 to 4 percent. During this period only two process-related incidents were encountered that resulted in any appreciable loss of on-stream factor. The first was of short duration and affected only one of the two reaction trains. In this case normal operation was recovered within just a few days. The second incident resulted from the processing of higher than design viscosity feed blends which led to foam carryover from the heavy unconverted oil flash drums. This ultimately resulted in fouling of the atmospheric tower feed furnace and flash gas circuit exchangers, necessitating a short shutdown of the unit to clean affected equipment.

Challenges

The foaming issue has been temporarily arrested by the injection of a feed diluent. A final solution, which involves minor modification to existing equipment, plus the addition of three new equipment services, will be implemented at the first unit turnaround scheduled for the spring of 2014. This will effectively eliminate foam carryover into the flash gas exchangers and the need for feed diluent injection.

Conclusion

Recent enhancements incorporated into our LC-FINING unit designs and operating experience gained from recently commissioned units have led to a new generation of plants with reduced investment, improved energy efficiency and enhanced reliability and on-stream factor. These enhancements have included:

- Addition of an Inter-Reactor Separator
- Addition of membrane technology for recycle gas purification
- Addition of Integrated Hydroprocessing
- Features to enhance unconverted oil stability and extend conversion limits

The above features have permitted reaction train capacities to be dramatically increased, treat gas rates and power consumption to be reduced, and associated hydroprocessing investment to be reduced by integrating it within the LC-FINING reaction system.

In addition, the development of our new LC-MAX high conversion process, which combines LC-FINING and SDA in an integrated hydroprocessing scheme, enables residue conversions of 85 volume percent to be attained even when processing very difficult high sediment forming opportunity crudes. These higher conversion levels can be

achieved with less reactor volume and lower catalyst addition rate and hydrogen consumption than is typically required with slurry hydrocracking processes.

GS Caltex's 60 kBPSD VR HCR which was commissioned in September 2010 is the most recent LC-FINING unit to be placed on-stream. This unit was commissioned just 42 months after the kick-off of the BED, besting industry norms by 9 to 18 months. The design of GSC's unit incorporates many recent LC-FINING process enhancements. As a result, this unit has consistently been able to achieve residue conversions of 70 to 74 weight percent, over its first 18 months of operation, without experiencing any fouling of its downstream fractionation systems, which is typical of most other VR HCR units. Over this initial operating period, GSC's VR HCR has also been able to achieve an on-stream factor of 94 percent exceeding industry norms by 3 to 4 percent. The successful fast track execution of this project and excellent unit operating factor are a tribute both to GSE&C's superior project and construction execution and quality assurance capabilities and GSC's superior operations team.